CONDUCTIVE PLASTIC RECTILINEAR TYPE JCL•JCL B series

RoHS compliant

Basic construction
Conductive plastic rectilinear type

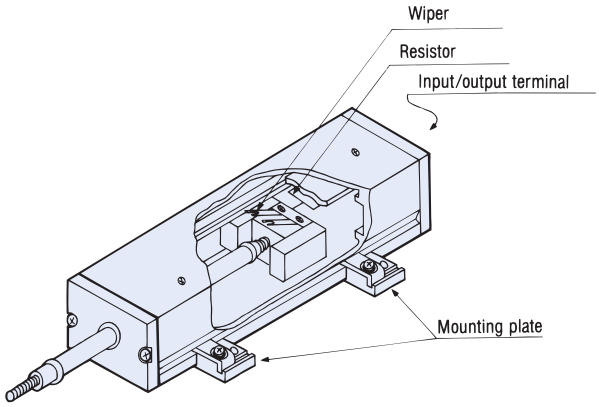

FEATURES

- 10 ~ 500 mm
- High resolution (Essentially infinite)
- Long life
- Mounting plate seating position can be set to any positions (JCL B)
- RoHS compliant

PART NUMBER DESIGNATION

J C L 1 0 0 B 1 k 0 . 5 %

Series name
JCL10, JCL20, JCL50, JCL100B
JCL200B, JCL300B, JCL500B

Independent linearity
0.5 % : ±0.5 %

Nominal resistance value (Ω)
1 k, 2 k, 5 k, 10 k

LIST OF PART NUMBERS

Effective electrical travel / Item	Nominal resistance value	Part number
10 mm	1 kΩ	JCL10 1 k 0.5 %
	2 kΩ	JCL10 2 k 0.5 %
	5 kΩ	JCL10 5 k 0.5 %
20 mm	1 kΩ	JCL20 1 k 0.5 %
	2 kΩ	JCL20 2 k 0.5 %
	5 kΩ	JCL20 5 k 0.5 %
	10 kΩ	JCL20 10 k 0.5 %
50 mm	1 kΩ	JCL50 1 k 0.5 %
	2 kΩ	JCL50 2 k 0.5 %
	5 kΩ	JCL50 5 k 0.5 %
	10 kΩ	JCL50 10 k 0.5 %

※ Verify the above part numbers when placing orders.

Effective electrical travel / Item	Nominal resistance value	Part number
100 mm	1 kΩ	JCL100B 1 k 0.5 %
	2 kΩ	JCL100B 2 k 0.5 %
	5 kΩ	JCL100B 5 k 0.5 %
	10 kΩ	JCL100B 10 k 0.5 %
200 mm	1 kΩ	JCL200B 1 k 0.5 %
	2 kΩ	JCL200B 2 k 0.5 %
	5 kΩ	JCL200B 5 k 0.5 %
	10 kΩ	JCL200B 10 k 0.5 %
300 mm	2 kΩ	JCL300B 2 k 0.5 %
	5 kΩ	JCL300B 5 k 0.5 %
	10 kΩ	JCL300B 10 k 0.5 %
500 mm	5 kΩ	JCL500B 5 k 0.5 %
	10 kΩ	JCL500B 10 k 0.5 %

STANDARD SPECIFICATIONS

Item / Part number		JCL						
		10	20	50	100B	200B	300B	500B
Resistance torelance	%	± 20						
Resolution		Essentially infinite						
Independent linearity	%	± 0.5						
Effective electrical travel	mm	10^{+1}_{0}	20^{+1}_{0}	50^{+1}_{0}	100^{+2}_{0}	200^{+2}_{0}	300^{+3}_{0}	500^{+3}_{0}
Mechanical travel	mm	Minimum effective electrical travel						
Power rating (at 40 °C)	W	0.13	0.25	0.6	1.5	3	4	7
Dielectric strength	Vrms	1000 1 min						
Insulation resistance	MΩ minimum	1000 (at DC500 V)						
Operating force	mN {gf} maximum	147 {15}			1960 {200}			
Stop strength	N·m {kgf·cm} minimum	0.196 {2}			0.981 {10}			
Maximum traveling speed	mm/s	500						
Temp. coefficient of resistance	ppm/°C	± 400						
Operating temp. range	°C	–40 ~ 85						
Life	cycle	20 million				10 million	6 million	4 million
Net weight	g	Approx. 23	Approx. 27	Approx. 38	Approx. 182	Approx. 272	Approx. 373	Approx. 555
Protection grade		IP40						

RATED POWER DERATING CURVE

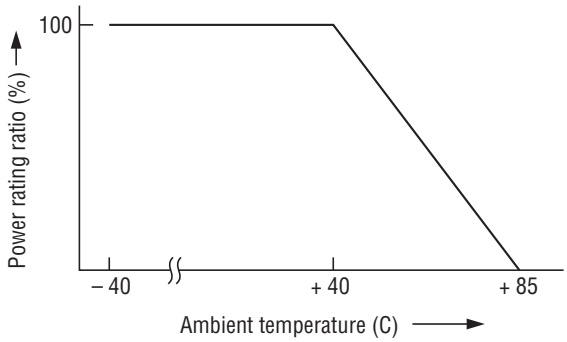

JCL/JCL B
POTENTIOMETERS

■ OUTLINE DIMENSIONS

Unless otherwise specified, tolerance: ± 0.5 (Unit: mm)

● JCL10 ~ 50

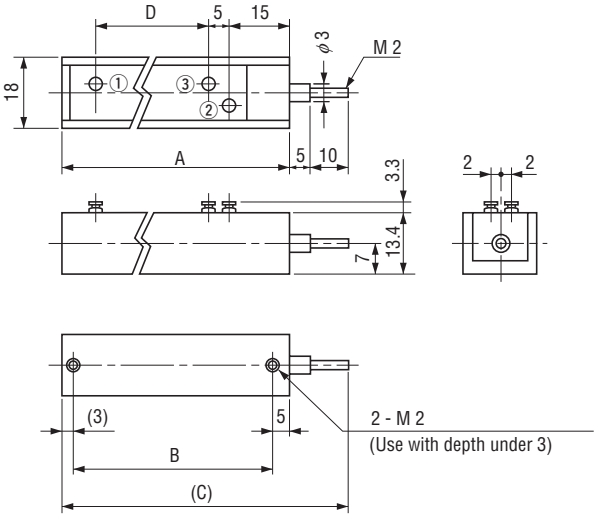

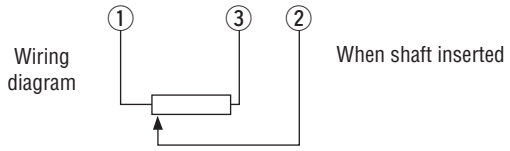

JCL10 ~ 50

Part number / Mark	A	B	(C)	D
JCL10	45	37	60	18
JCL20	55	47	70	28
JCL50	85	77	100	58

● JCL100B ~ 500B

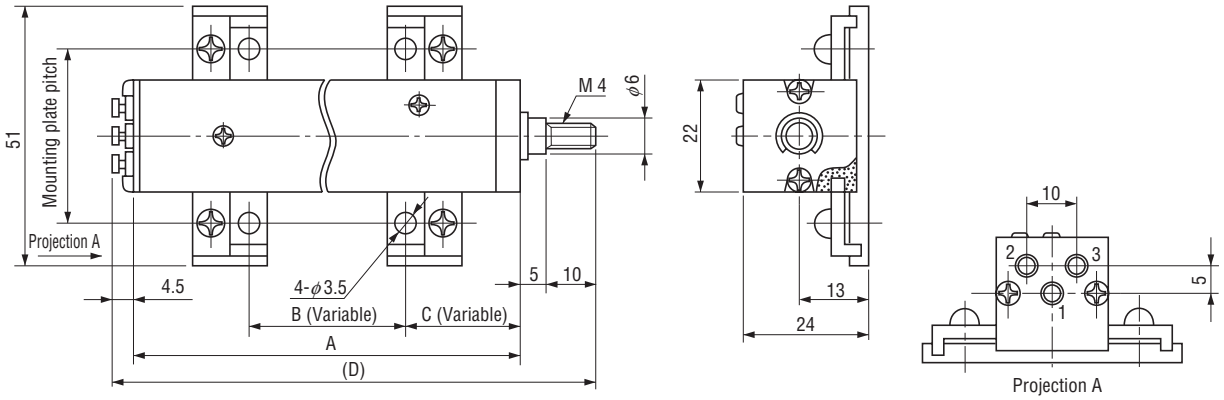

JCL100B ~ 500B

Part number / Mark	A	B	C	(D)
JCL100B	159	50 ~ 129	17 ~ 96	178.5
JCL200B	259	100 ~ 229	17 ~ 146	278.5
JCL300B	369	150 ~ 339	17 ~ 206	388.5
JCL500B	569	250 ~ 539	17 ~ 306	588.5

B dimensions require minimum 1/2 of effective electrical length.